ADAPTERS & COUPLINGS

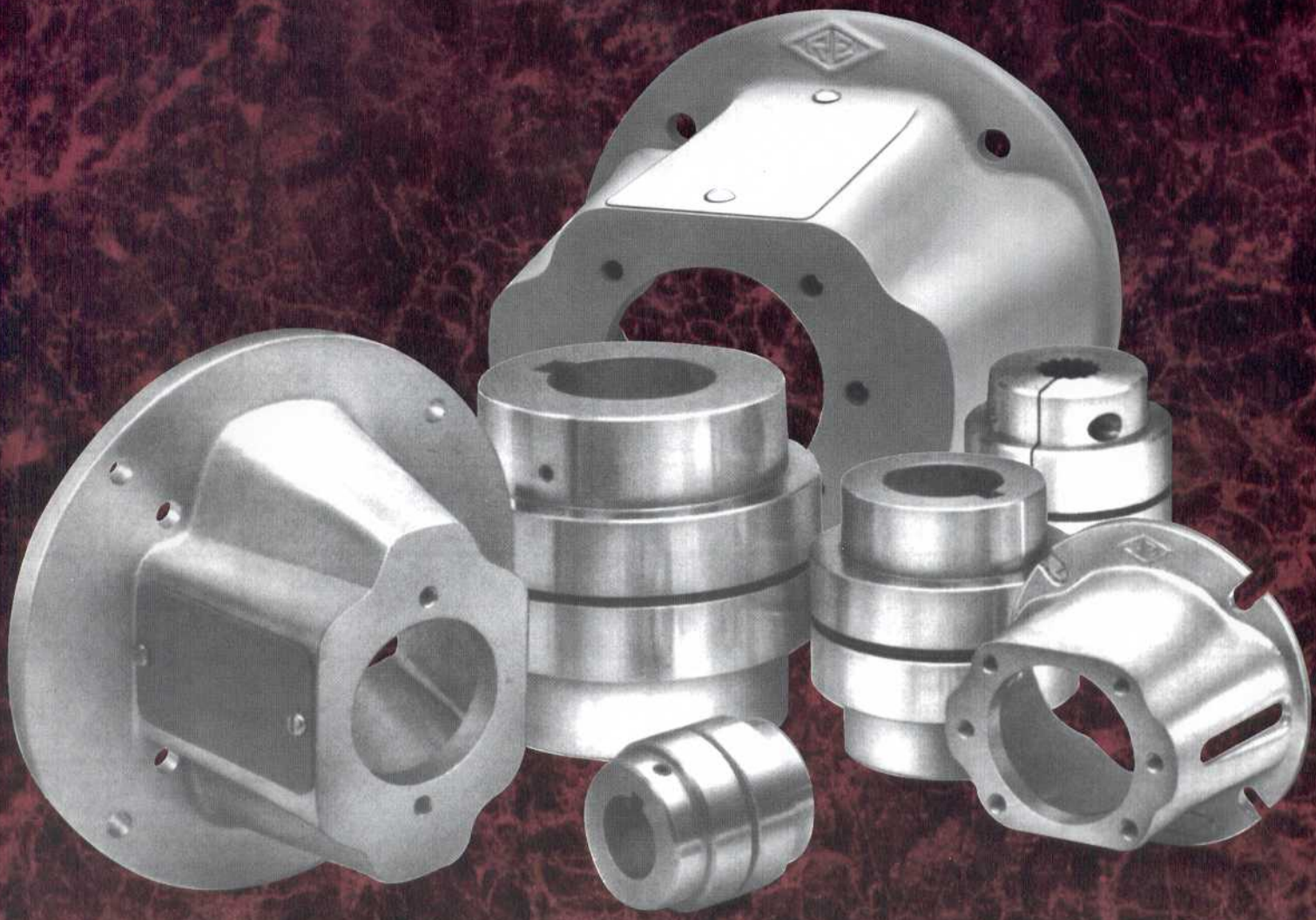

REULAND ELECTRIC

Electric Motors and Related Products

Reuland Electric Distributor Products

Table of Contents

Pump/Motor Adapter Selection Guide 3

Pump Flange Configuration 4
- Table 1: SAE - 2 Bolt Mount 4
- Table 2: SAE - 4 Bolt Mount 4
- Table 3: Metric Mounting 4

Motor Frame Data 5
- Table 4: NEMA "C" Shaft Dimensions 5

Horizontal Pump/Motor Adapters
- Table 5: NEMA Frames 56C, 143/145TC, 182/184UC 6
- Table 6: NEMA Frames 182/256TC, 254/256UC 6
- Table 7: NEMA Frames 284/286TC, 284/286TSC, 284/286UC 7
- Table 8: NEMA Frames 324TC/TSC-405TC/TSC, 324UC/USC-405UC/USC 7
- Table 9: NEMA Frames 444TC/TSC-445TC/TSC 7

Vertical Pump/Motor Adapters 8
- Table 10: NEMA Frames 56C-145TC 9
- Table 11: NEMA Frames 182TC-256TC 9

Engine Pump/Motor Adapters 10
- Table 12: Adapter Dimensions 10

Coupling Selection Guide 11
- Service Factor Guide 11
- Grommet Data 12
- Bore Tolerances 12
- Coupling Data 13
- Ordering and Availability 14-15

The One Source for All Your Flexible Couplings and Pump/Motor Adapter Needs

When you connect a pump to a motor, you want perfect alignment for optimal performance. And that's what you get when you specify flexible couplings and pump/motor adapters from Reuland. These two components work together to achieve near-perfect concentricity. Together they reduce vibration, heat, noise and wear and tear. In short, they're your best guarantee for increased performance and life expectancy.

Fast Delivery

Our flexible couplings and pump/motor adapters are stocked in Reuland's Midwest and West Coast facilities for fast response and reduced transportation costs. Most orders are shipped within 24 hours of receiving your order.

The Reuland Guarantee

All Reuland products are covered by our quality and service guarantee. You must be satisfied with the quality of a Reuland flexible coupling or we'll replace it. Complete details of our Quality and Service Guarantee are listed on our flexible coupling policy sheet.

Reuland Pump/Motor Adapter Selection Guide

Selection

STEP 1: What motor are you using?
The first thing to do is determine the size motor being used.

STEP 2: Motor shaft length.
Use Table 4 (the AH dimension) to identify your motor shaft length.

STEP 3: Pump shaft length.
Determine your pump shaft length including the pilot.

STEP 4: Add the pump shaft and the motor shaft together.
Add your pump shaft length (from Step 2) to your motor shaft length (Step 3). A 1/16" gap is recommended between motor and pump shafts using a Reuland flexible coupling. Maximum distance between shafts is determined by the coupling used for your application. Minimum and maximum distance for coupling used can be found on page 13.

STEP 5: Pump flange configuration.
Compary your pump flange's style and mounting dimensions with those in Tables 1, 2 or 3.

Example: If you have a 4 bolt mount with a 4" pilot and a bolt circle of 5", you have a SAE B pump configuration.

STEP 6: Determining the part number.
Now that we have the information we need, we will determine the part number.

Use the tables located on pages 6-10 to find your NEMA frame motor. Find your pump flange and go across to the length option that is required. If your exact length is not listed, find the closest to your requirements. Make sure the maximum distance between shafts (from coupling data table on page 13) is not exceeded. The number listed will be the part number.

Part Numbers

Reuland's part number system is application related. The first number sequence represents the motor frame group or engine pilot I.D.

The next two digits indicate the length of the adapter or face to face.

The third group identifies the pump mounting configuration.

Example for NEMA adapter:

145-42-2A

Motor Frame Group — Length (4.25") — Pump Configuration

Example for gas engine adapter:

575-52-2AA

Engine Pilot (5.75") — Length (5.25") — Pump Configuration

Note: Every 182 and larger adapter includes a safety orange access cover. In addition, all NEMA adapters listed in our catalog come complete with mounting bolts and washers to secure the pump and motor to the adapter.

Pump Flange Configuration

Table 1: SAE – 2 Bolt Mount

MOUNTING FLANGE	PILOT DIMENSIONS	FLANGE DIMENSIONS	
SAE	A	K	M
AA	2.000/1.998	3.255 3.245	0.406
A	3.250/3.248	4.192 4.182	0.438
B	4.000/3.998	5.755 5.745	0.562
C	5.000/4.998	7.130 7.120	0.687
D	6.000/6.498	9.005 8.995	0.812
E	6.500/6.4998	12.503 12.495	1.062

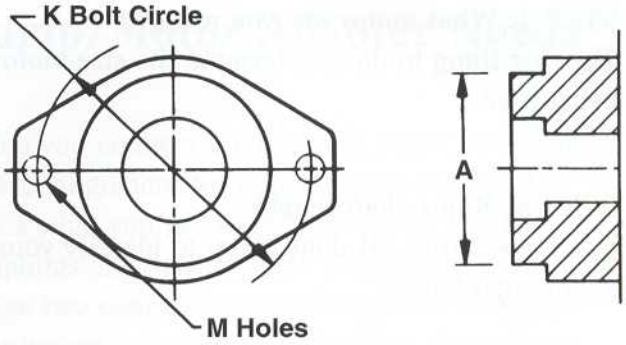

Table 2: SAE – 4 Bolt Mount

MOUNTING FLANGE	PILOT DIMENSIONS	FLANGE DIMENSIONS	
SAE	A	S	R
USA 4F17	1.781/1.779	2.843 2.833	0.375
A	3.250/3.248	4.130 4.120	0.438
B	4.000/3.998	5.005 4.995	0.562
C	5.000/4.998	6.380 6.370	0.562
D	6.000/6.498	9.005 8.995	0.812
E	6.500/6.4998	12.503 12.495	0.812
F	7.000/6.998	13.786 13.776	1.062

Table 3: Metric Mounting*

MOUNT	PILOT DIMENSION	BOLT CIRCLE
4 bolt	80mm	100mm
4 bolt	100mm	125mm
4 bolt	125mm	160mm
4 bolt	160mm	200mm

* Additional sizes available upon request

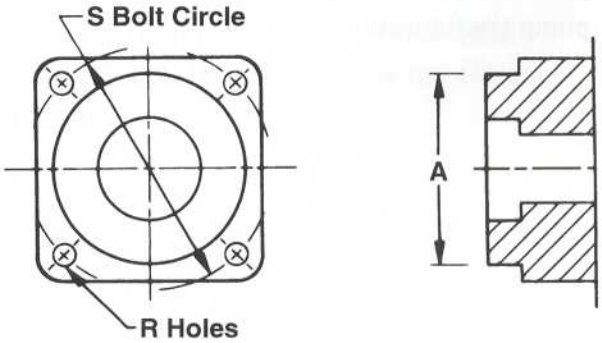

Table 4: NEMA "C" Shaft Dimensions

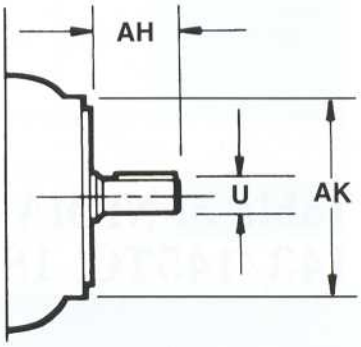

T-FRAME DATA					
MOTOR SIZE	SHAFT INFO			AK	HP*
	AH	U	KEY		
056C	2.06	.625	.187	4.5	1/4-1/2
143TC 145TC	2.12	8.75	.187	4.5	1-2
182TC 184TC	2.62	1.125	.250	8.5	3-5
213TC 215TC	3.12	1.375	.312	8.5	7.5-10
254TC 256TC	3.75	1.625	.375	8.5	15-20
284TSC 286TSC	3.00	1.625	.375	10.5	25-30
284TC 286TC	4.38	1.875	.500	10.5	25-30
324TSC 326TSC	3.50	1.875	.500	12.5	40-50
324TC 326TC	5.00	2.125	.500	12.5	40-50
364TSC 365TSC	3.50	1.875	.500	12.5	60-75
364TC 365TC	5.62	2.375	.625	12.5	60-75
404TSC 405TSC	4.00	2.125	.500	12.5	100-125
404TC 405TC	7.00	2.875	.750	12.5	100-125
444TSC 449TSC	4.50	2.375	.625	16	150-200
444TC 449TC	8.25	3.375	.875	16	150-200

U-FRAME DATA					
MOTOR SIZE	SHAFT INFO			AK	HP*
	AH	U	KEY		
182UC 184UC	2.12	.875	.187	4.5	1-2
213UC 215UC	2.75	1.125	.250	8.5	3-5
254UC 256UC	3.50	1.375	.312	8.5	7.5-10
284UC 286UC	4.625	1.625	.375	10.5	15
324USC 326USC	3.00	1.625	.375	12.5	25-30
324UC 326UC	5.375	1.875	.500	12.5	25-30
364USC 365USC	3.50	1.875	.500	12.5	40-50
364UC 365UC	6.125	2.125	.500	12.5	40-50
404USC 405USC	4.00	2.125	.500	12.5	60-75
404UC 405UC	6.875	2.375	.625	12.5	60-75
444USC 449USC	4.00	2.125	.500	16	125**-150
444TC 449TC	8.375	2.875	.750	16	125**-150

* Horsepower at 1750 RPM

** Horsepower at 3450 RPM

Reuland Horizonal Pump/Motor Adapters

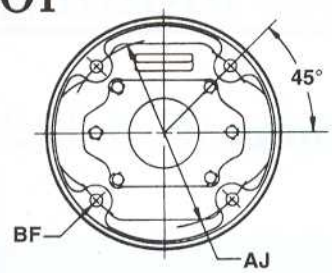

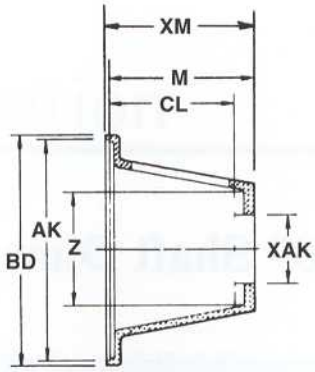

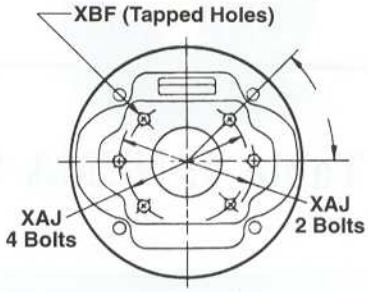

Table 5: NEMA Frames 56C, 143/145TC, 182/184UC

MOTOR FLANGE	AJ	AK	BD	BF
	5.88	4.501	6.81	13/32

PUMP FLANGE		XAJ	XAK	XBF TAPPED HOLES	3.50" LENGTH OPTION (XM)			4.25" LENGTH OPTION (XM)			4.50" LENGTH OPTION (XM)		
					Z	CL	ADAPTER NO.	Z	CL	ADAPTER NO.	Z	CL	ADAPTER NO.
USA4F17	4 Bolt	2.84	1.782	5/16-18	3.38	2.38	145-35-4F	3.38	3.50	145-42-4F	3.12	3.75	145-45-4F
SAE-AA	2 Bolt	3.25	2.001	3/8-16			145-35-2AA			145-42-2AA	3.75	3.50	145-45-2AA
SAE-A	2 Bolt 4 Bolt	4.19 4.12	3.251	3/8-16			145-35-2A			145-42-2A			145-45-2A
80MM	4 Bolt	100MM	80MM	5/16-18			145-35-80M			145-42-80M			145-45-80M

Table 6: NEMA Frames 182/256TC, 254/256UC

MOTOR FLANGE	AJ	AK	BD	BF
	7.25	8.501	9.00	17/32

PUMP FLANGE		XAJ	XAK	XBF TAPPED HOLES	4.75" LENGTH OPTION (M)			5.00" LENGTH OPTION (M)			5.25" LENGTH OPTION (M)		
					Z	CL	ADAPTER NO.	Z	CL	ADAPTER NO.	Z	CL	ADAPTER NO.
USA4F17	4 Bolt	2.84	1.782	5/16-18	4.75	4.00	256-47-4F	5.06	4.31	256-50-4F	5.06	4.31	256-52-4F
SAE-AA	2 Bolt	3.25	2.001	3/8-16			256-47-2AA			256-50-2AA			256-52-2AA
SAE-A	2 Bolt 4 Bolt	4.19 4.12	3.251	3/8-16			256-47-2A			256-50-2A			256-52-2A
SAE-B	2 Bolt	5.75	4.001	1/2-13	**					256-50-2B 2 Bolt Only			256-52-2B 2 Bolt Only
80MM	4 Bolt	100MM	80MM	5/16-18	4.75	4.00	256-47-80M			256-50-80M			256-52-80M

PUMP FLANGE		XAJ	XAK	XBF TAPPED HOLES	5.81" LENGTH OPTION (M)			6.00" LENGTH OPTION (M)			6.81" LENGTH OPTION (M)		
					Z	CL	ADAPTER NO.	Z	CL	ADAPTER NO.	Z	CL	ADAPTER NO.
SAE-A	2 Bolt 4 Bolt	4.19 4.12	3.251	3/8-16	4.06	5.06	256-58-2A	**			4.06	6.06	256-68-2A
SAE-B	2 Bolt 4 Bolt	5.75 5.00	4.001	1/2-13			256-58-2B	4.06	5.12	256-60-2B			256-68-2AA
SAE-C	2 Bolt 4 Bolt	7.12 6.38	5.001	5/8-11 1/2-13	**					256-60-2C	**		
80MM	4 Bolt	100MM	80MM	5/16-18	4.06	5.06	256-58-80M	**			4.06	6.06	256-68-80M
100MM	4 Bolt	125MM	100MM	3/8-16	**			4.06	5.12	256-60-100M	**		
125MM	4 Bolt	160MM	125MM	1/2-13	**					256-60-125M	**		

PUMP FLANGE		XAJ	XAK	XBF TAPPED HOLES	7.00" LENGTH OPTION (M)			7.50" LENGTH OPTION (M)		
					Z	CL	ADAPTER NO.	Z	CL	ADAPTER NO.
SAE-B	2 Bolt 4 Bolt	5.75 5.00	4.001	1/2-13	4.38	6.12	256-70-2B	**		
SAE-C	2 Bolt 4 Bolt	7.12 6.38	5.001	5/8-11 1/2-13			256-70-2C	**		
SAE-D	2 Bolt 4 Bolt	9.00	6.001	3/4-10	**			5.00	7.00	256-75-2D
100MM	4 Bolt	125MM	100MM	3/8-16	4.38	6.12	256-70-100MM	**		
125MM	4 Bolt	160MM	125MM	1/2-13			256-70-125MM	**		
160MM	4 Bolt	200MM	160MM	5/8-11			256-70-160MM	**		

** Consult factory

Table 7: NEMA Frames 284/286TC, 284/286TSC, 284/286UC

MOTOR FLANGE	AJ	AK	BD	BF
	9.00	10.501	11.00	17/32

PUMP FLANGE		XAJ	XAK	XBF TAPPED HOLES	6.88" LENGTH OPTION (M)			7.50" LENGTH OPTION (M)		
					Z	CL	ADAPTER NO.	Z	CL	ADAPTER NO.
SAE-A	2 Bolt 4 Bolt	4.19 4.12	3.251	3/8-16	5.00	5.94	286-68-2A	5.75	5.75	286-75-2A
SAE-B	2 Bolt 4 Bolt	5.75 5.00	4.001	12/-13			286-68-2B			286-75-2B
SAE-C	2 Bolt 4 Bolt	7.12 6.38	5.001	5/8-11 1/2-13			286-68-2C			286-75-2C
SAE-D	2 Bolt 4 Bolt	9.00	6.001	3/4-10	**			**		
100MM	4 Bolt	125MM	100MM	3/8-16	5.00	5.94	286-68-100M	5.75	5.75	286-75-100M
125MM	4 Bolt	160MM	125MM	1/2-13			286-68-125M			286-75-125M
160MM	4 Bolt	200MM	160MM	5/8-11	**			**		

PUMP FLANGE		XAJ	XAK	XBF TAPPED HOLES	8.00" LENGTH OPTION (M)			8.69" LENGTH OPTION (M)		
					Z	CL	ADAPTER NO.	Z	CL	ADAPTER NO.
SAE-A	2 Bolt 4 Bolt	4.19 4.12	3.251	3/8-16	**			5.00	5.94	286-86-2A
SAE-B	2 Bolt 4 Bolt	5.95 5.00	4.001	1/2-13	6.50	6.50	286-80-2B			286-86-2B
SAE-C	2 Bolt 4 Bolt	7.12 6.38	5.001	5/8-11 1/2-13			286-80-2C			286-86-2C
SAE-D	2 Bolt 4 Bolt	9.00	6.001	3/4-10			286-80-2D	**		
125MM	4 Bolt	160MM	125MM	1/2-13			286-80-125M	5.00	5.94	286-86-125M
160MM	4 Bolt	200MM	160MM	5/8-11			286-80-160M	**		

Table 8: NEMA Frames 324TC/TSC-405TC/TSC, 324UC/USC-405UC/USC

MOTOR FLANGE	AJ	AK	BD	BF
	11.00	12.501	14.00	21/32

PUMP FLANGE		XAJ	XAK	XBF TAPPED HOLES	6.62" LENGTH OPTION (M)			7.62" LENGTH OPTION (M)			8.75" LENGTH OPTION (M)		
					Z	CL	ADAPTER NO.	Z	CL	ADAPTER NO.	Z	CL	ADAPTER NO.
SAE-B	2 Bolt 4 Bolt	5.75 5.00	4.001	1/2-13	5.75	5.25	405-66-2B	7.25	6.50	405-76-2B	7.25	7.62	405-87-2B
SAE-C	2 Bolt 4 Bolt	7.12 6.38	5.001	5/8-11 1/2-13			405-66-2C			405-76-2C			405-87-2C
SAE-D	2 Bolt 4 Bolt	9.00	6.001	3/4-10	**					405-76-2D 2 Bolt Only			405-87-2D 2 Bolt Only
125MM	4 Bolt	160MM	125MM	5/8-11	5.75	5.25	405-66-125M			405-76-125M			405-87-125M

PUMP FLANGE		XAJ	XAK	XBF TAPPED HOLES	9.00" LENGTH OPTION (M)			9.50" LENGTH OPTION (M)		
					Z	CL	ADAPTER NO.	Z	CL	ADAPTER NO.
SAE-C	2 Bolt 4 Bolt	7.12 6.38	5.001	5/8-11 1/2-13	6.75	8.25	405-90-2C	5.75	8.50	405-95-2C
SAE-D	2 Bolt 4 Bolt	9.00	6.001	3/4-10			405-90-4D 4 Bolt Only			405-95-2D
160MM	4 Bolt	200MM	160MM	5/8-11			405-90-160M			405-95-160M

Table 9: NEMA Frames 444TC/TSC-445TC/TSC

MOTOR FLANGE	AJ	AK	BD	BF
	14.00	16.001	18.00	21/32

PUMP FLANGE		XAJ	XAK	XBF TAPPED HOLES	9.00" LENGTH OPTION (M)			9.50" LENGTH OPTION (M)		
					Z	CL	ADAPTER NO.	Z	CL	ADAPTER NO.
SAE-C	2 Bolt 4 Bolt	7.12 6.38	5.001	5/8-11 1/2-13	10.75	7.12	445-88-2C	10.00	8.25	445-97-2C
SAE-D	2 Bolt 4 Bolt	9.00	6.001	3/4-10			445-88-2D			445-97-2D
SAE-E	4 Bolt	12.50	6.501	1-8			445-88-2E			445-97-2E

** Consult factory

Reuland Vertical Pump/Motor Adapters

Our vertical pump/motor adapters can be mounted directly to the reservoir. The pump and adapter assembly is enclosed within the tank.

Standard adapters fit NEMA C face motors and frame sizes 56C to 256TC. Reuland gives you two vertical mounting options in motor frames 56C through 145TC.

Option A
Utilizes the four existing motor holes for mounting to the reservoir top.

Option B
Shares the same design principal as the 182TC through 256TC. This design allows you to pre-assemble the motor, pump and coupling prior to reservoir top mounting. This oversized flange design comes with a gasket and four extra mounting holes on the motor end.

Selection

Option A
Option A is limited to a tank top thickness of 1/16" minimum to 5/32" maximum. Please specify tank top thickness when ordering. Assembly is per Table 10, Option A.

Option B
Option B (Table 10) and 182TC through 256TC mountings (outlined in Table 11) can mount to tank tops of any thickness.

Note: Mounting bolts are NOT included for attaching to the reservoir top. Only those bolts required for motor and pump mounting are included.

56C Through 145TC

Option A

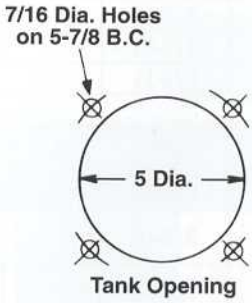

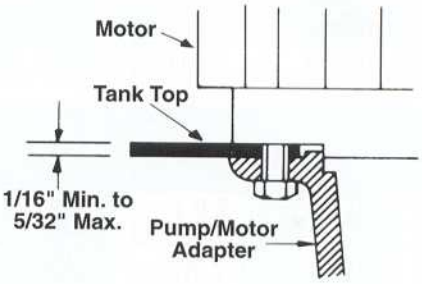

Option B

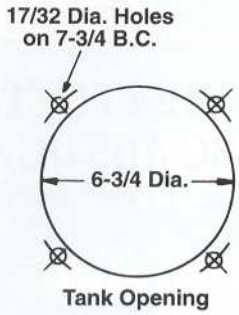

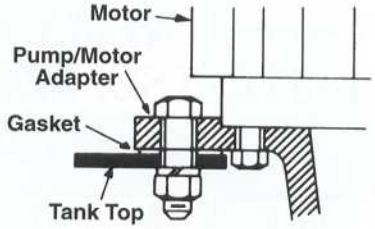

182TC Through 256TC

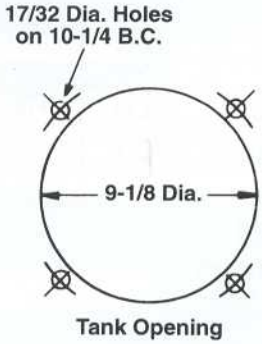

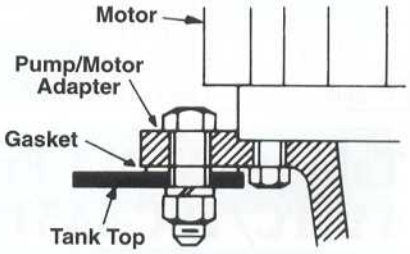

Reuland Vertical Pump/Motor Adapters

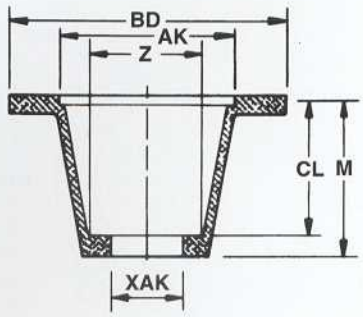

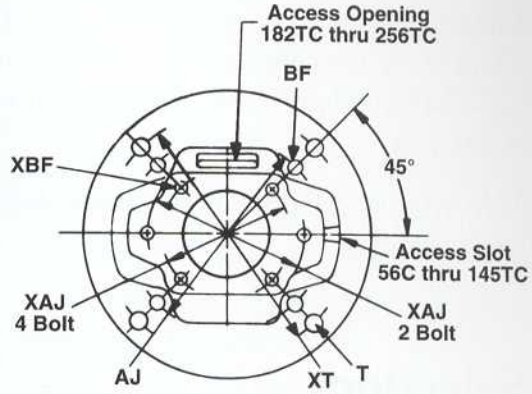

Table 10: NEMA Frames 56C-145TC

MOTOR FLANGE	AJ	AK	BD	BF
	5.88	4.501	6.81	13/32

Option A

PUMP FLANGE		XAJ	XAK	XBF TAPPED HOLES	3.50" LENGTH OPTION (M)					4.25" LENGTH OPTION (M)				
					Z	CL	T	XT	ADAPTER NO.	Z	CL	T	XT	ADAPTER NO.
USA4F17	4 Bolt	2.84	1.782	5/16-18	3.25	2.75	Not Provided		145-35-4FV	3.25	3.50	Not Provided		145-42-4FV
SAE-AA	2 Bolt	3.25	2.001	3/8-16					145-35-2AAV					145-42-2AAV
SAE-A	2 Bolt 4 Bolt	4.19 4.12	3.251	3/8-16					145-35-2AV					145-42-2AV

Option B

PUMP FLANGE		XAJ	XAK	XBF TAPPED HOLES	3.50" LENGTH OPTION (M)					4.375" LENGTH OPTION (M)				
					Z	CL	T	XT	ADAPTER NO.	Z	CL	T	XT	ADAPTER NO.
USA4F17	4 Bolt	2.84	1.782	5/16-18	3.75	2.50	17/32	7/75	145-35-4FVG	4.00	2.88	17/32	7.75	145-42-4FVG
SAE-AA	2 Bolt	3.25	2.001	3/8-16					145-35-2AAVG					145-42-2AAVG
SAE-A	2 Bolt 4 Bolt	4.19 4.12	3.251	3/8-16					145-35-2AVG					145-42-AVG 2 Bolt Only

Table 11: NEMA Frames 182TC-256TC

MOTOR FLANGE	AJ	AK	BD	BF
	7.25	8.501	9.00	17/32

PUMP FLANGE		XAJ	XAK	XBF TAPPED HOLES	5.00" LENGTH OPTION (M)					5.81" LENGTH OPTION (M)				
					Z	CL	T	XT	ADAPTER NO.	Z	CL	T	XT	ADAPTER NO.
USA4F17	4 Bolt	2.84	1.782	5/16-18	5.06	4.31	17/32	10.25	254-50-4FVG	4.75	5.06	17/32	10.25	---
SAE-AA	2 Bolt	3.25	2.001	3/8-16					256-50-2AAVG					---
SAE-A	2 Bolt	4.19	3.251	3/8-16					256-50-2AVG 2 Bolt Only					145-42-AVG 2 Bolt Only
SAE-B	2 Bolt	5.75	4.001	1/2-13					256-50-2BVG 2 Bolt Only					256-58-2BVG 2 Bolt Only

PUMP FLANGE		XAJ	XAK	XBF TAPPED HOLES	6.81" LENGTH OPTION (M)					7.19" LENGTH OPTION (M)				
					Z	CL	T	XT	ADAPTER NO.	Z	CL	T	XT	ADAPTER NO.
SAE-A	2 Bolt	4.19	3.251	3/8-16	4.75	6.06	17/32	10.25	256-68-2AVG 2 Bolt Only	4.38	5.06	17/32	10.25	---
SAE-B	2 Bolt	5.75	4.001	1/2-13					256-68-2BVG 2 Bolt Only					---
SAE-C	2 Bolt	7.12	5.001	5/8-11					---					256-71-2CVG 2 Bolt Only

Reuland Engine Pump/Motor Adapters

Our engine adapters are designed to fit a broad range of engine-to-pump combinations. 575-42-4F and larger come complete with safety access cover.

Note: NO mounting hardware is included with engine mounts.

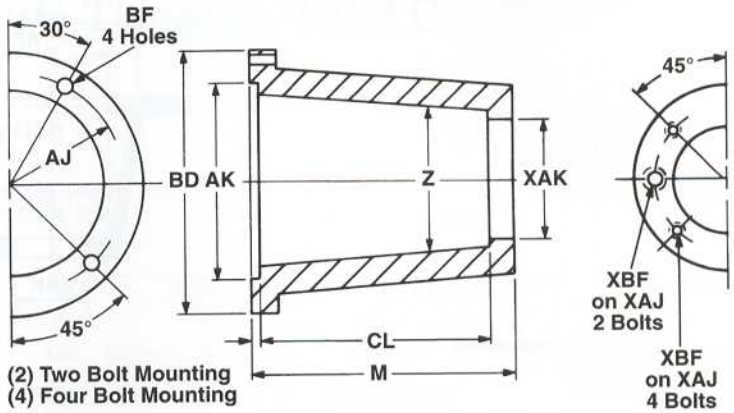

Selection

Determine engine pilot (AK) and bolt circle (AJ) needed for your specific application. Confirm availability on Table 12. Locate applicable pump mounting configuration. Make sure the combined engine shaft and pump shaft with pilot is 3/16" less than the M dimension.

Table 12: Adapter Dimensions

PART NUMBER	CL	M	Z	AJ	AK	BD	BF	XAK	XAJ	XBF (TAP)
162-44-4F	3.88	4.431	3.12	3.62	1.622	4.50	3/8	1.782	2.84	5/16-18
575-52-4F	4.62	5.250	3.50	6.50	5.751 5.755	7.50	13/32	1.782	2.84	5/16-18
575-52-2AA								2.001	3.25	3/8-16
575-52-2A								3.251	(2) 4.19 (4) 4.12	3/8-16
575-52-2B								4.001	5.75	1/2-13
700-70-2A	5.12	7.000	3.50	7.75	6.999 7.001	9.00	15/32	3.251	(2) 4.19 (4) 4.12	3/8-16
700-70-2B								4.001	(2) 5.75 (4) 5.00	1/2-13
700-70-2C								5.001	7.12	5/8-11
788-97-2B	8.19	9.750	5.62	9.25	7.877 7.880	11.00	21/32	4.001	5.75	1/2-13
788-97-2C								5.001	7.12	5/8-11

Additional sizes available – consult factory

Reuland Coupling Selection Guide

Just because applications have the same horsepower, doesn't mean they require the same size flexible couplings. If you follow these simple steps, you can easily find the flexible coupling in the following Coupling Data Table that's perfect for your application.

STEP 1: Determine the Service Factor.
Motors with the same horsepower are assigned different service factors to reflect the different loads and stresses. For example, a 40HP motor running a standard hydraulic application with infrequent stops carries a service factor of 1.00 while another 40HP application on an injection molding machine has a service factor of 3.00. This means the second motor requires a larger flexible coupling that the first. Ignoring the service factor can cause you to buy a coupling too small for your application, leading to premature wear and maintenance.

Use the table below to locate your application.

STEP 2: The Equation.
Use this equation to determine the rated torque.

Rated Torque = (HP x 63000) / RPM x Service Factor

STEP 3: Determine Shaft Size.
A shaft diameter MUST NOT exceed a coupling's maximum bore. For example, Reuland's RC3 flexible coupling has a 1-5/8" maximum bore (shaft diameter). Therefore, 1-5/8" is the largest shaft that can be installed in the coupling.

STEP 4: Coupling Selection.
Go to the Coupling Data Table and select the coupling size that meets your rated torque. (Make sure the motor shaft does not exceed the coupling's maximum bore.) Now that you have determined the size coupling to fit your application you can go to the Coupling Bore Availability Chart (page 15) to select the bore and keyway.

Service Factor Guide

LOAD CLASSIFICATION	PRIME MOVER		
	STANDARD MOTOR OR TURBINE	I.C. ENGINE 6 OR MORE CYLINDERS	I.E. ENGINE LESS THAN 6 CYLINDERS
LIGHT LOADS Even or Steady Load - Non-Reversing *Blowers • Centrifugal Pumps • Agitators • Conveyors • Fans*	1.0	1.5	2.0
MODERATE LOADS Moderate Shock - Uneven Load - Infrequent Reversing *Elevators • Mixers • Machine Tools • Reciprocating Pumps*	1.5	2.0*	2.5*
HEAVY LOADS Heavy Shock - Uneven Load - Frequent Reversing *Shaker Conveyors • Crushers • Winches • Presses*	2.0*	2.5*	3.0*

*Recommended use of Hytrel insert

Reuland Coupling Selection Guide

Grommets

Reuland offers two flexible grommets, the P380 and the Hytrel, that cover a wide range of applications. Grommet materials offer complete electrical insulation and eliminate contact between coupling halves.

Part Number

To specify the grommet you need, simply use RG (Reuland Grommet), size of coupling (1,2,3, etc.) then H for Hytrel or P for P380. For example, for RC2 coupling set with a P380 grommet, the grommet number would be RG2-P; with a Hytrel, the grommet would be RG2-H.

Grommet Data

TYPE	TEMP. RANGE	MISALIGNMENT		SHORE HARDNESS	CHARACTERISTICS
		ANGULAR	PARALLEL/ INCHES		
P380	-30°F to 175°F	1	.015	38D	Good for moderate cyclic loading, offers good oil and chemical resistance, misalignment and dampening capacity.
Hytrel	-60°F to 250°F	0.5	.015	55D	Recommended for severe duty applications. Excellent oil and chemical resistance. Torsionally stiffer than the P380.

Bore Tolerances

NOMINAL BORE DIAMETER		
FROM	TO (INCLUDING)	TOLERANCE
.375	1.000	+.0008 / +.0003
1.00	2.000	+.0013 / +.0005
2.00	3.000	+.0018 / +.0008
3.00	3.875	+.0020 / +.0010

Reuland Coupling Selection Guide

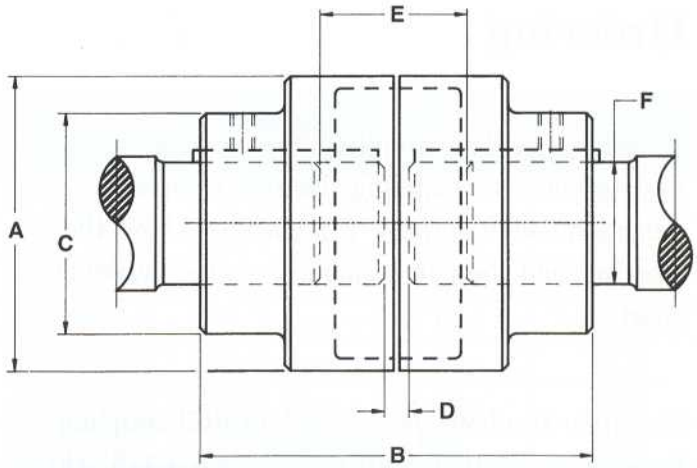

Coupling Data

COUPLING SIZE	MAX BORE	DIMENSION INCHES			DISTANCE BETWEEN SHAFTS (INCHES)		RATED TORQUE LB-IN	RATED HP AT		INERTIA LB-FT	INSERT
	F	A	B	C	D (MIN)	E (MAX)		100	1800		
RC1	1.125	2.62	2.56	2.12	.06	0.75	473	0.75	13.5	0.005	P380
							630	1	18		Hytrel
RC2	1.375	2.91	3.17	2.31	.06	0.88	630	1	18	0.009	P380
							1103	1.75	31.5		Hytrel
RC3	1.625	3.44	3.60	2.97	.06	0.88	1261	2	36	0.022	P380
							2206	3.5	63		Hytrel
RC4	1.875	4.00	4.24	3.12	.06	1.12	1576	2.5	45	0.039	P380
							3309	5.25	94.5		Hytrel
RC5	2.375	4.81	4.68	4.06	.06	1.25	3466	5.5	99	0.100	P380
							6933	11	198		Hytrel
RC6	2.625	5.97	6.04	4.56	.06	1.38	7563	12	216	0.260	P380
							15756	25	450		Hytrel
RC7	2.875	6.91	7.01	5.25	.06	1.88	12605	20	360	0.480	P380
							28361	45	810		Hytrel
RC8	3.875	8.62	7.92	7.12	.06	2.00	31513	50	900	1.560	P380
							47269	75	1350		Hytrel

Ordering and Availability

Ordering

To order a Reuland coupling you will first need to determine the coupling size (see Coupling Selection Guide on page 13). Once you have the size, just add the part number from the availability chart.

Example: You have determined an RC3 coupling for your application. Your motor has a 1-3/8" shaft diameter and a 5/16" keyway. Go to the adjacent chart and look up this configuration. Your part number is a RC3-1375-312. Your pump shaft is a spline. Look up the spline and add the part number. In this case it is a 14t 12/24 pitch. The number would be RC3-1412-AS. Don't forget the insert. If your service factor is 1.5 or lower you can use a P380. If it is above 1.5, we recommend using a Hytrel.

Be sure to include both bore and keyway sizes. Reuland Electric has a staff of trained professionals to assist you if needed.

Part Numbers

Reuland's part numbering system is based on the coupling's size, bore and key or spline. The first three digits represent the Reuland coupling size. The next four digits refer to the bore or number of teeth/pitch (in inches or millimeters). The last grouping indicates keyways, clamps, set screws or spline options.

Bore and keyway example:

RC3 - 1375 - 375

Coupling Size — RC3
1-3/8 Bore — 1375
3/8 Keyway — 375

Spline example:

RC5 - 14 12 - A S

Coupling Size — RC5
Number of Teeth — 14
Pitch — 12
Aluminum — A
Set Screw — S

Spline example:

RC5 - 14 12 - S C

Coupling Size — RC5
Number of Teeth — 14
Pitch — 12
Steel — S
Clamp — C

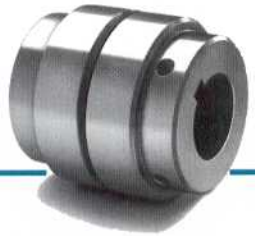

Ordering and Availability

Coupling Bore Availability

PART NUMBER	BORE & KEY SIZE	COUPLING SIZE
-0375-093	3/8 Bore x 3/32 Key	RC1-RC2
-0437-093	7/16 Bore x 3/32 Key	RC1-RC2
-0437-125	7/16 Bore x 1/8 Key	RC1-RC2
-0500-125	1/2 Bore x 1/8 Key	RC1-RC3
-0562-125	9/16 Bore x 1/8 Key	RC1-RC3
-0625-156	5/8 Bore x 5/32 Key	RC1-RC3
-0625-187	5/8 Bore x 3/16 Key	RC1-RC4
-0687-187	11/16 Bore x 3/16 Key	RC1-RC4
-0750-125	3/4 Bore x 1/8 Key	RC1-RC4
-0750-187	3/4 Bore x 3/16 Key	RC1-RC6
-0875-187	7/8 Bore x 3/16 Key	RC1-RC6
-0875-250	7/8 Bore x 1/4 Key	RC1-RC6
-0937-250	15/16 Bore x 1/4 Key	RC1-RC6
-1000-187	1 Bore x 3/16 Key	RC1-RC6
-1000-250	1 Bore x 1/4 Key	RC1-RC6
-1125-250	1-1/8 Bore x 1/4 Key	RC1-RC7
-1187-250	1-3/16 Bore x 1/4 Key	RC2-RC7
-1250-250	1-1/4 Bore x 1/4 Key	RC2-RC8
-1250-312	1-1/4 Bore x 5/16 Key	RC2-RC8
-1375-312	1-3/8 Bore x 5/16 Key	RC2-RC8
-1375-375	1-3/8 Bore x 3/8 Key	RC2-RC8
-1437-375	1-7/16 Bore x 3/8 Key	RC3-RC8
-1500-312	1-1/2 Bore x 5/16 Key	RC3-RC8
-1500-375	1-1/2 Bore x 3/8 Key	RC3-RC8
-1625-375	1-5/8 Bore x 3/8 Key	RC3-RC8
-1750-375	1-3/4 Bore x 3/8 Key	RC4-RC8
-1750-437	1-3/4 Bore x 7/16 Key	RC4-RC8
-1875-500	1-7/8 Bore x 1/2 Key	RC4-RC8
-1937-500	1-15/16 Bore x 1/2 Key	RC5-RC8
-2000-500	2 Bore x 1/2 Key	RC5-RC8
-2125-500	2-1/8 Bore x 1/2 Key	RC5-RC8
-2250-500	2-1/4 Bore x 1/2 Key	RC5-RC8
-2375-625	2-3/8 Bore x 5/8 Key	RC5-RC8
-2500-625	2-1/2 Bore x 5/8 Key	RC6-RC8
-2625-625	2-5/8 Bore x 5/8 Key	RC6-RC8
-2750-625	2-3/4 Bore x 5/8 Key	RC7-RC8
-2875-750	2-7/8 Bore x 3/4 Key	RC7-RC8

PART NUMBER	BORE & KEY SIZE	COUPLING SIZE
-3000-750	3 Bore x 3/4 Key	RC8
-3250-750	3-1/4 Bore x 3/4 Key	RC8
-3375-875	3-3/8 Bore x 7/8 Key	RC8
-3500-875	3-1/2 Bore x 7/8 Key	RC8
-3625-875	3-5/8 Bore x 7/8 Key	RC8
-3750-875	3-3/4 Bore x 7/8 Key	RC8
-3875-100	3-7/8 Bore x 1 Key	RC8
METRIC BORE		
-M019-06	19mm Bore x 6mm Key	RC1-RC5
-M020-06	20mm Bore x 6mm Key	RC1-RC6
-M024-08	24mm Bore x 8mm Key	RC1-RC6
-M025-08	25mm Bore x 8mm Key	RC1-RC7
-M028-08	28mm Bore x 8mm Key	RC1-RC7
-M030-08	30mm Bore x 8mm Key	RC2-RC7
-M032-10	32mm Bore x 10mm Key	RC2-RC7
-M035-10	35mm Bore x 10mm Key	RC3-RC7
-M038-10	38mm Bore x 10mm Key	RC3-RC7
-M040-12	40mm Bore x 12mm Key	RC4-RC8
-M042-12	42mm Bore x 12mm Key	RC4-RC8
-M045-14	45mm Bore x 14mm Key	RC4-RC8
-M050-14	50mm Bore x 14mm Key	RC5-RC8
-M060-18	60mm Bore x 18mm Key	RC6-RC8

SPLINE COUPLING DATA*

PART NO.	TEETH	PITCH	ALUMINUM	STEEL
-0916-**	9	16/32	RC1-RC5	RC1-RC5
-1308-**	13	8/16	RC4-RC8	RC6-RC8
-1316-**	13	16/32	RC1-RC6	RC1-RC6
-1412-**	14	12/24	RC2-RC8	RC3-RC8
-1508-**	15	8/16	RC4-RC8	RC6-RC8
-1516-**	15	16/32	RC1-RC6	RC2-RC6
-1712-**	17	12/24	RC3-RC8	RC5-RC8
-2116-**	21	16/32	RC3-RC8	RC5-RC8
-2316-**	23	16/32	RC3-RC8	RC5-RC8
-2716-**	27	16/32	RC4-RC8	RC7-RC8

* All splines are SAE 30, PA, flat root, side fit

** AS = Aluminum Spline, AC = Aluminum Clamp, SS = Steel Set Screw, SC = Steel Clamp

Please Note: Contact Reuland sales for any bore or key not listed above

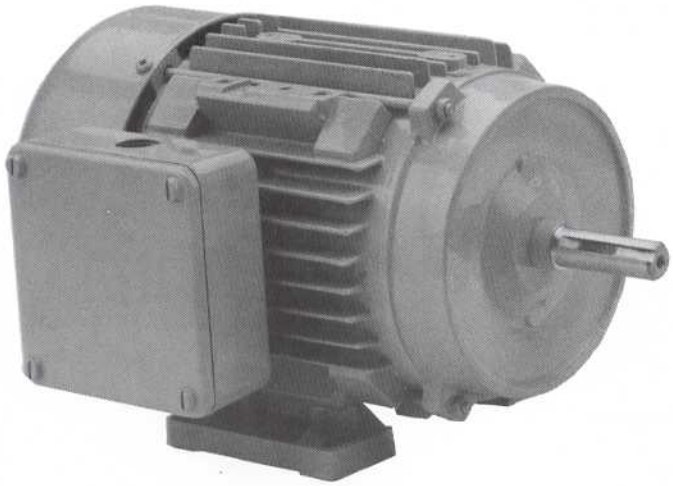

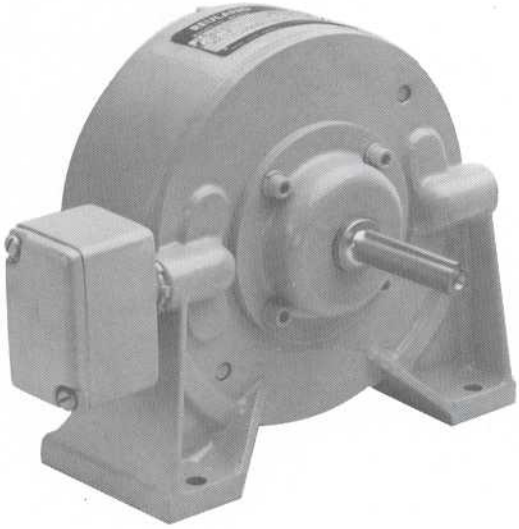

REULAND ELECTRIC

DISTRIBUTOR PRODUCTS DIVISION
4500 East Grand River Avenue
Howell, Michigan 48843
Phone (517) 546-3318 Fax (517) 546-0211

WEST COAST FACILITY
17969 East Railroad Street
Industry, California 91749
Phone (626) 964-6411 Fax (626) 965-1283